UNIVERSITY OF CAMBRIDGE INTERNATIONAL EXAMINATIONS
General Certificate of Education
Advanced Subsidiary Level and Advanced Level

CANDIDATE NAME

CENTRE NUMBER

CANDIDATE NUMBER

6156367919

PHYSICS **9702/32**

Paper 32 Advanced Practical Skills 2 **October/November 2009**

2 hours

Candidates answer on the Question Paper.

Additional Materials: As listed in the Confidential Instructions.

READ THESE INSTRUCTIONS FIRST

Write your Centre number, candidate number and name on all the work you hand in.
Write in dark blue or black pen.
You may use a soft pencil for any diagrams, graphs or rough working.
Do not use staples, paper clips, highlighters, glue or correction fluid.
DO **NOT** WRITE IN ANY BARCODES.

Answer **both** questions.
You will be allowed to work with the apparatus for a maximum of one hour for each question.
You are expected to record all your observations as soon as these observations are made, and to plan the presentation of the records so that it is not necessary to make a fair copy of them. The working of the answers is to be handed in.
Additional answer paper and graph paper should be submitted only if it becomes necessary to do so.
You are reminded of the need for good English and clear presentation in your answers.

At the end of the examination, fasten all your work securely together.
All questions in this paper carry equal marks.

For Examiner's Use	
1	
2	
Total	

This document consists of **9** printed pages and **3** blank pages.

DCA (SJF5068/CG) 11663/3
© UCLES 2009

UNIVERSITY of CAMBRIDGE International Examinations

[Turn over

BLANK PAGE

You may not need to use all of the materials provided.

For Examiner's Use

1 In this experiment you will investigate the position of a wooden rod suspended in water as the load on it is varied.

Assemble the apparatus as shown in Fig. 1.1 and then fill the beaker to the brim with water.

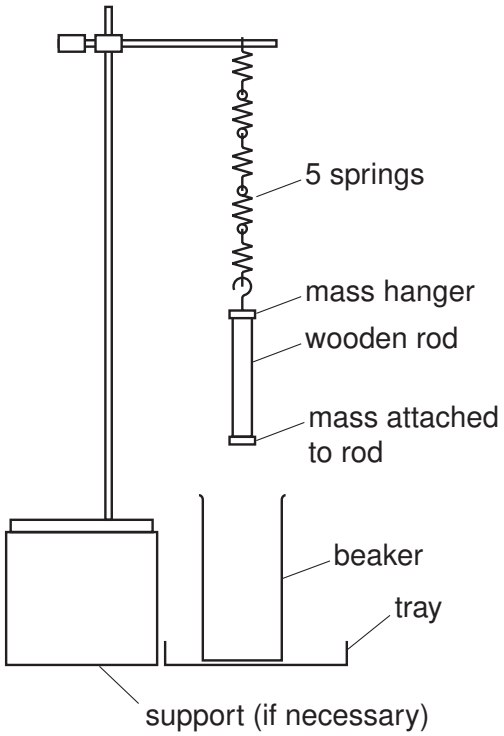

Fig. 1.1

Adjust the height of the clamp so that the rod is lowered into the water until the mass attached to the bottom of the rod is just covered, as shown in Fig. 1.2.

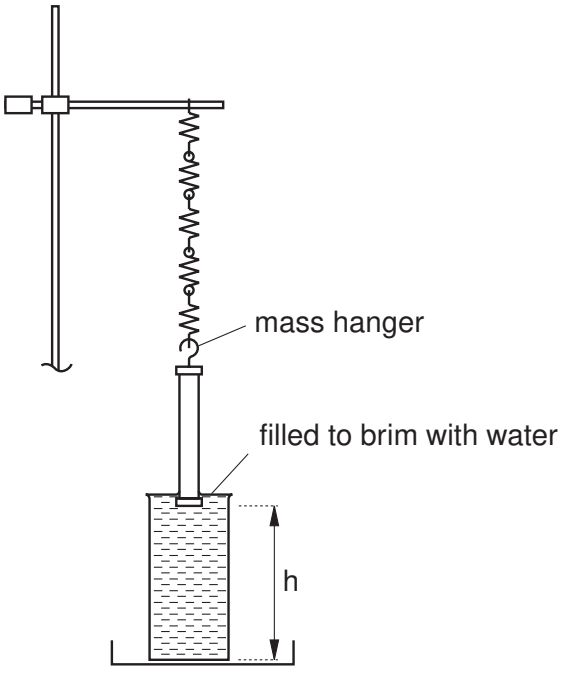

Fig. 1.2

(a) Record h, as shown in Fig. 1.2.

For Examiner's Use

h = ... cm

(b) Add a mass m to the mass hanger and repeat **(a)**. Repeat this procedure until you have six sets of readings for m and h. Include in your table values for W, where W is the weight of the added mass m.
(Use $g = 9.81\,\text{ms}^{-2}$.)

(c) **(i)** Plot a graph of W on the y-axis against h on the x-axis, and draw the line of best fit.

(ii) Determine the gradient of the line.

gradient = ...

© UCLES 2009

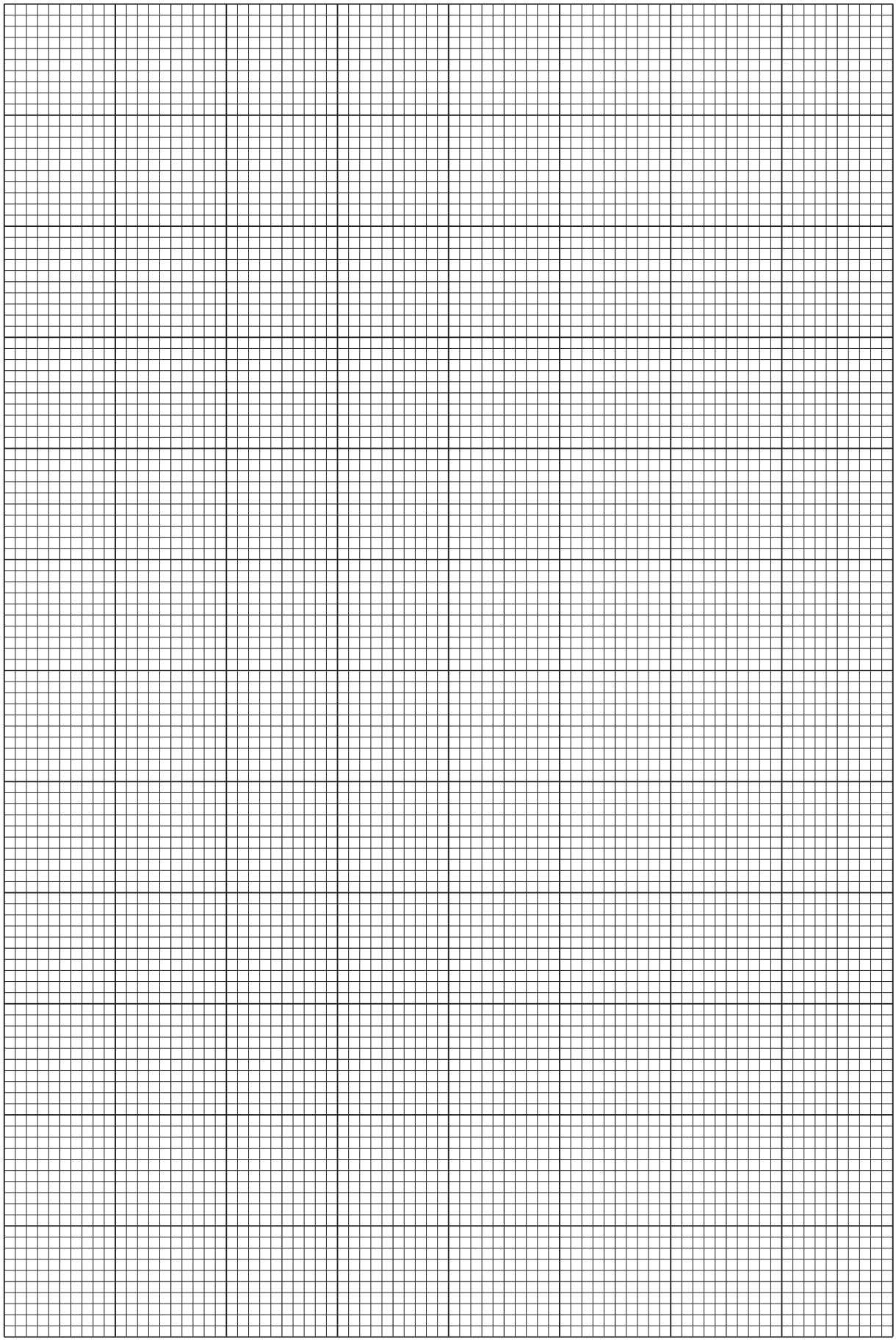

For Examiner's Use

© UCLES 2009

(d) (i) Use the vernier calipers to determine the diameter d of the wooden part of the rod.

For Examiner's Use

d = ...

(ii) Calculate the cross-sectional area A of the wooden part of the rod, using the relationship

$$A = \frac{\pi d^2}{4} .$$

A = ... m^2

(e) The relationship between W and h is

$$W = c - h(k + \rho A g)$$

where c is a constant, k is the spring constant, ρ is the density of water ($1000\,kg\,m^{-3}$), and g is the acceleration of free fall ($9.81\,m\,s^{-2}$).

Using your answers from **(c)(ii)** and **(d)(ii)**, determine the value of k. Give an appropriate unit.

k = ...

© UCLES 2009

BLANK PAGE

Please turn over for Question 2.

You may not need to use all of the materials provided.

For Examiner's Use

2 In this experiment you are provided with a ball suspended by a thread so that it is next to a solid vertical surface. You will investigate how the rebound distance is related to the release distance when it swings against the solid surface.

(a) Assemble the apparatus as shown in Fig. 2.1, with the thread clamped between the two wooden blocks so that l is about 50 cm, and with the brick positioned so that it is just touching the stationary ball.

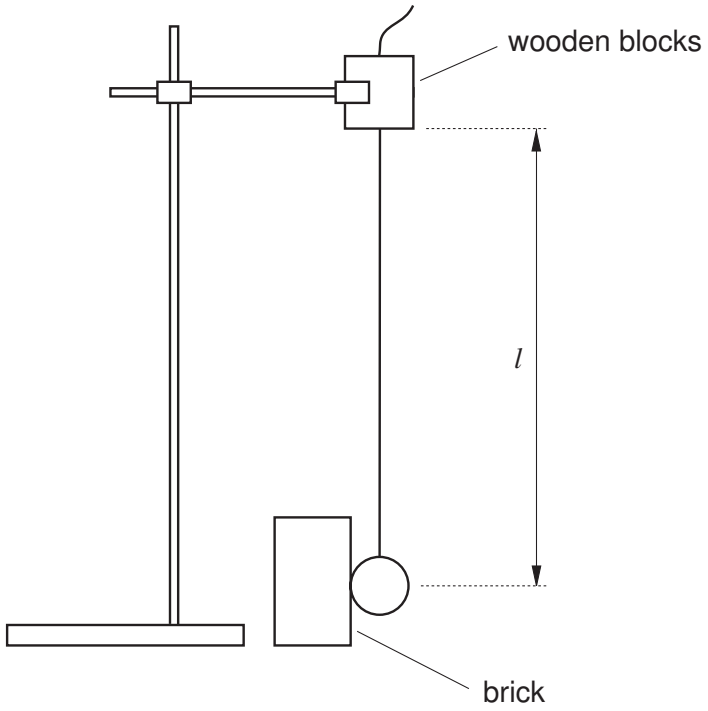

Fig. 2.1

Measure l.

l = ...

(b) (i) Pull back the ball and measure the distance *a* shown in Fig. 2.2. Do not exceed *a* = 25 cm.

For Examiner's Use

a = ... cm

(ii) Release the ball and make measurements to determine the rebound distance *b* shown in Fig. 2.2.

b = ... cm

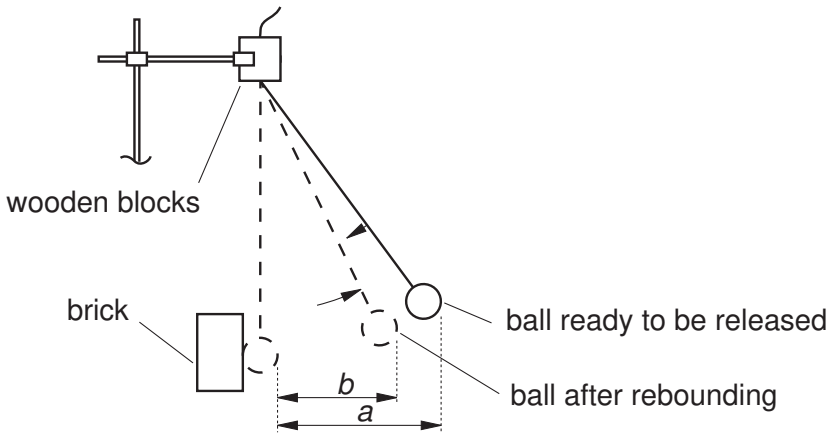

Fig. 2.2

(c) (i) Explain how you used the apparatus to ensure that the rebound distance *b* was measured as accurately as possible.

.....

.....

.....

.....

.....

(ii) Estimate the percentage uncertainty in *b*.

percentage uncertainty in *b* = ...

© UCLES 2009

(d) For values of a less than 25 cm, theory predicts that

$$k = \frac{l - \sqrt{l^2 - b^2}}{l - \sqrt{l^2 - a^2}}$$

where k is a constant.

Calculate a value for k.

For Examiner's Use

k = ...

(e) Repeat **(b)(i), (b)(ii)** and **(d)** using a different value of a.

a = ...

b = ...

k = ...

(f) Explain whether your results indicate that k is a constant.

.....

.....

.....

.....

© UCLES 2009

(g) (i) State four sources of error or limitations of the procedure in this experiment.

For Examiner's Use

1. .....

.....

2. .....

.....

3. .....

.....

4. .....

.....

(ii) Suggest four improvements that could be made to this experiment. You may suggest the use of other apparatus or different procedures.

1. .....

.....

2. .....

.....

3. .....

.....

4. .....

.....

© UCLES 2009

BLANK PAGE

Permission to reproduce items where third-party owned material protected by copyright is included has been sought and cleared where possible. Every reasonable effort has been made by the publisher (UCLES) to trace copyright holders, but if any items requiring clearance have unwittingly been included, the publisher will be pleased to make amends at the earliest possible opportunity.

University of Cambridge International Examinations is part of the Cambridge Assessment Group. Cambridge Assessment is the brand name of University of Cambridge Local Examinations Syndicate (UCLES), which is itself a department of the University of Cambridge.